CONTOUR HOURGLASS

Assemble frame and apply fabric on either a clean surface or using a drop cloth. Use white gloves to assemble frame and to keep dirt and fingerprints away from fabric.

Assemble frame by matching numbered joints and connecting with snap button connectors. Ensure that each snap button is fully engaged in matching hole for a secure connection.

For ease of assembly, orient tubes so that snap button aligns with hole before inserting ferrule in mating tube end. It is recommended that you first assemble each side of the outer frame and then connect top and bottom center connections simultaneously. Position center tube in frame before engaging top and bottom snap buttons.

Use Allen key provided to secure center tube ends by inserting bolts through outer frame.
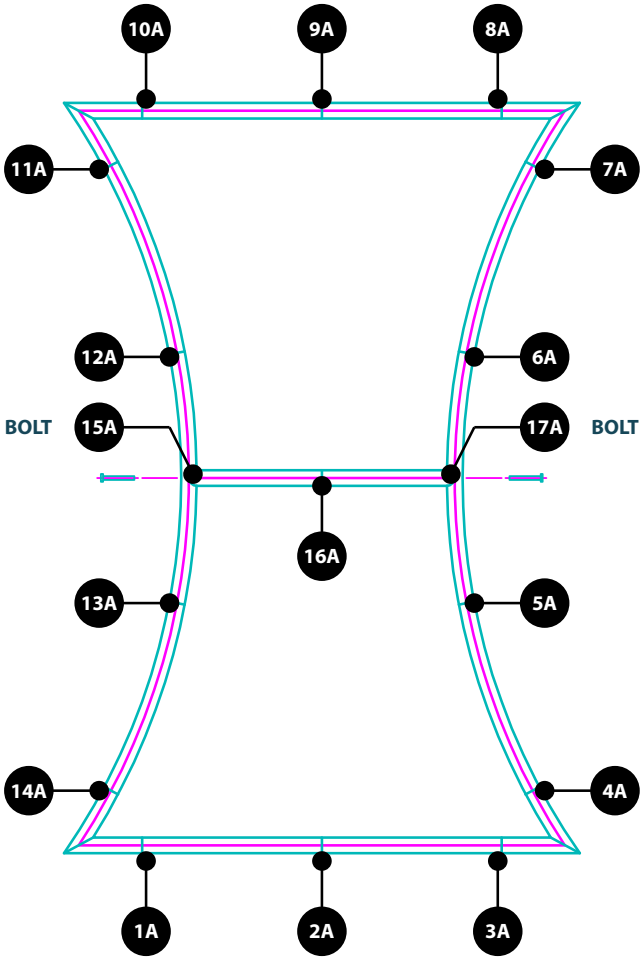
Apply cover from the side of the frame. Gently pull fabric over the frame and zip closed. Adjust fabric by pulling and twisting around the tubes for best fit.